NeoTimber
ALUMINIUM BALUSTRADES

Spindle Railing System - Stair

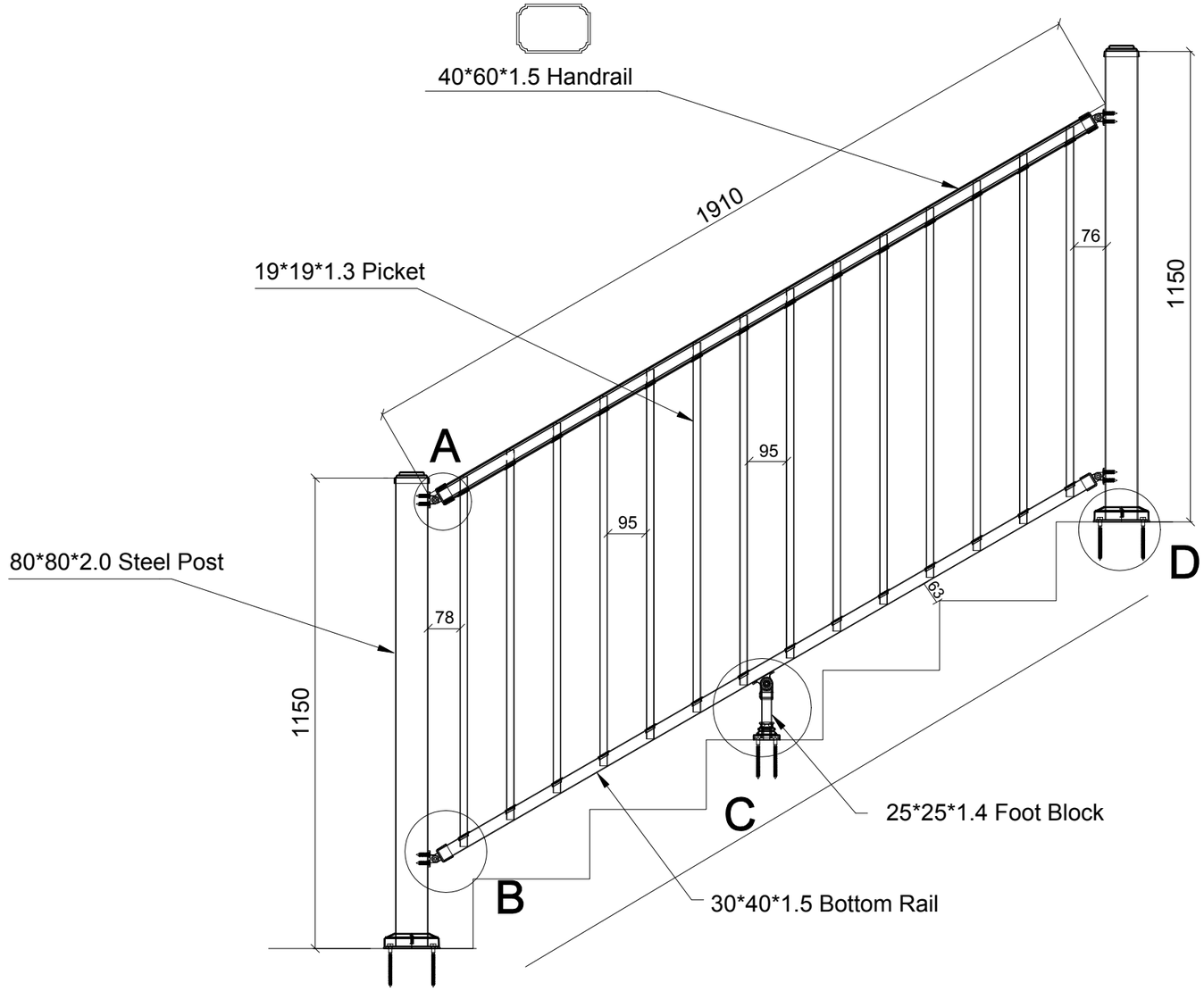

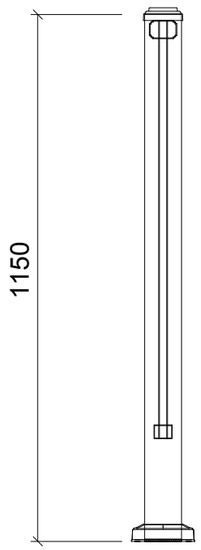

Sectional Drawing

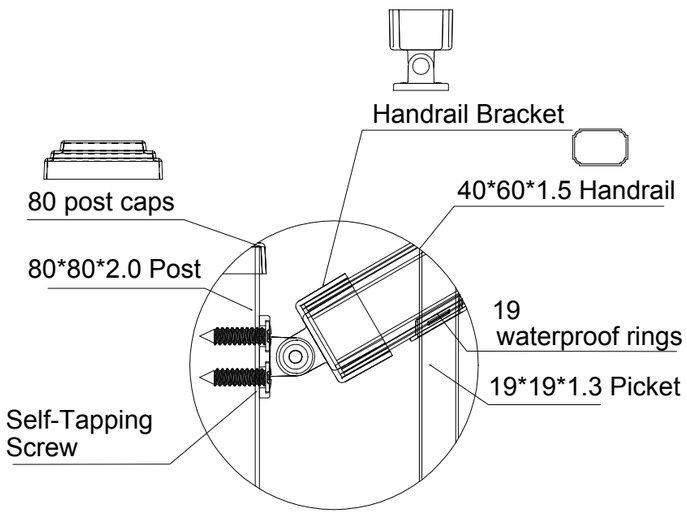

A: Details

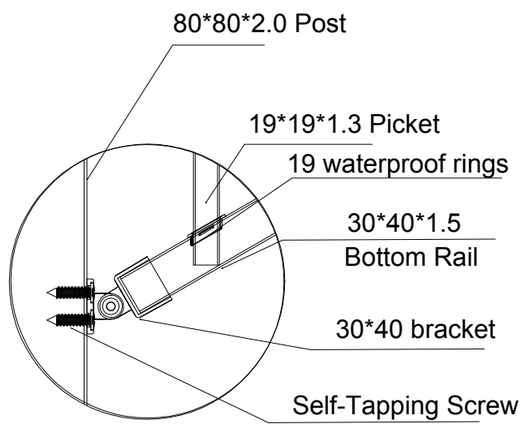

B: Details

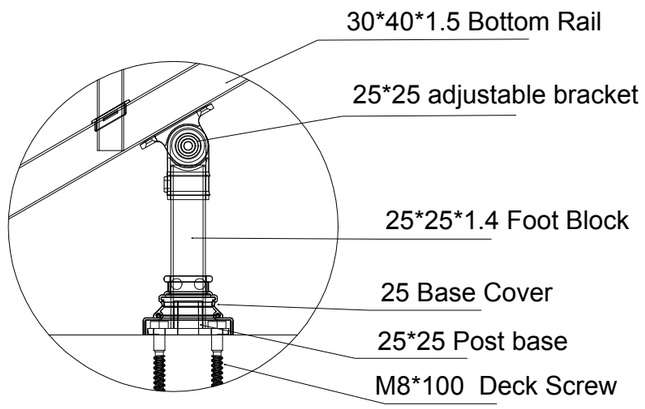

C: Details

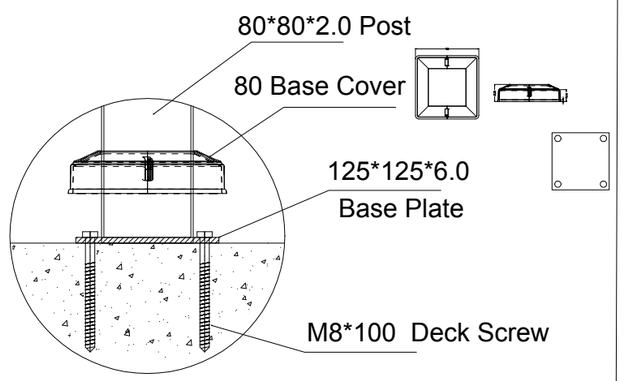

D: Details